ISSN 1392 - 1207. MECHANIKA. 2010. Nr.4(84)

The modular principle of design of adaptive film lubrication bearings

V. Vekteris*, V. Mokšin**
**Vilnius Gediminas Technical University, J. Basanavičiaus 28, 03224 Vilnius, Lithuania, E-mail: vekteris@vgtu.lt*
***Vilnius Gediminas Technical University, J. Basanavičiaus 28, 03224 Vilnius, Lithuania, E-mail: vadim@vgtu.lt*

1. Introduction

The principles of design of adaptive hydrodynamically and hydrostatically loaded bearings are presented in the literature [1]. Yet, the literature does not mention of the possibility of modular design of tribological systems. Both mathematical and structural elements of systems may serve as modules of such systems. The issue, on the whole, depends on structural complexity and the needs, which may arise in this connection. The majority of works feature mathematical modules of the Reynolds equation type; however, the problem of modular design remains still open. Mitchell was the first to solve the problem of modular design by inventing the tilting-pad hydrodynamic slider bearing. Later in the researches [1-5] carried out aimed at designing bearings of the above-mentioned type. However, coverage of modular design has been scarce as yet. The present work deals with certain aspects of modular design of tribological systems, using pad-type bearings in illustration of the subject.

2. The conception of modular design

The conception of modular design allows adding new functions to modular elements at various hierarchical level of a system under consideration. For example, bearings with a dynamically stressed carrying lubricant layer can be designed out of separate modular elements in the form of functional units of a rank system. In the given systems, as shown in Fig. 1, the rotor journal is evenly embraced by several segments which are linked by multilayer thin elastic ribbons, made of materials not limited by the value of their coefficient of linear expansion. The linking ribbons may consist of two or three layers and may be integral, punched or provided with projections on the inner side. They are attached to the segments rigidly, hinged together or free floating with clearances. Multilayer linking ribbons (Fig. 1) act as thermotribological damper, as well as a thermoelastic adaptive regulator, i. e. they control the difference in the oil film thickness at the entrance and exit of the segments and damp vibrations [1].

The number of segments in the bearing may range from three to six. Most widely used are three-segment bearings, shown in Fig. 1, that form functional units of modular-type tribological systems. Connecting bearing components enables the functions of adaptivity and controllability in such systems. Segments are borne either by special pins with a spherical bearing surface, shown in Fig. 1 or by bearing balls or rollers, contacting with the outer races or housing. The rollers may be solid or hollow, with a slot for thermoelastic deformation. The bearings may also be constructed without the intermediate bearing components or with bearings in the form of a half-torus, filled with lubricant, which substantially increases their rigidity, peripheral self-alignment and segment cooling [1].

The method for adjusting the radial clearance between rotor journal and segments is determined by the type of bearing elements. It may be either passive or active. In passive cases, adjustment segments are displaced as a result of forced displacement of bearing components (by displacement of bearing pins, axial compression of outer races, etc.), such that the linking ribbons change their configuration and the bearing is always ready for operation. If the bearing is placed into a rigid housing without any intermediate bearing components [1], or in the form of a half-torus, the diametric clearance can be selected technologically or with the help of conical shaped rotor journal. Due to compliance of the linking ribbons, the segments may self-align in the direction of rotation and axial direction, as well as in the peripheral direction.

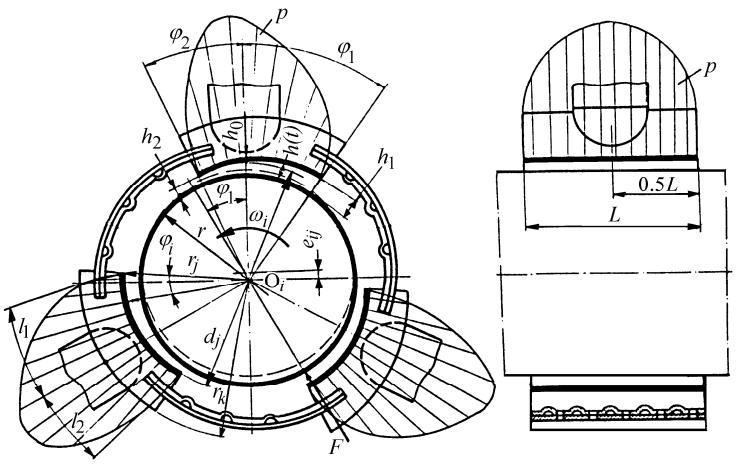

Fig. 1 Design diagram of an adaptive bearing of modular structure

3. Mathematical study

The momentum equation and the law of conservation of mass for flow of viscous fluid in these systems can be written in the well-known dimensionless form as follows [3]

$$Re\,Sh\frac{\partial v_x}{\partial \tau}+Re\,\rho V\nabla v_x=\frac{Re}{Fr}\rho F_x-\frac{\partial p}{\partial x}-\frac{2}{3}\frac{\partial}{\partial x}\left(\mu divV\right)+\Diamond_x \tag{1}$$

$$\psi_h\,Re\,Sh\frac{V}{U}\rho\frac{\partial v_y}{\partial \tau}+\psi_h\,Re\frac{V}{U}\rho V\nabla v_y=\frac{Re}{Fr}\rho F_y-\frac{\partial p}{\partial y}-\psi_h^2\frac{2}{3}\frac{\partial}{\partial y}\left(\mu divV\right)+\Diamond_y \tag{2}$$

$$Re\,Sh\frac{L}{r}\rho\frac{\partial v_z}{\partial \tau}+Re\frac{L}{r}\rho V\nabla v_z=\frac{Re}{Fr}\frac{L}{r}\rho F_z-\frac{\partial p}{\partial z}-\frac{2}{3}\frac{\partial}{\partial z}\left(\mu divV\right)+\Diamond_z \tag{3}$$

$$Sh\frac{\partial \rho}{\partial \tau}+\frac{\partial\left(v_x\rho\right)}{\partial \varphi}+\frac{V}{U}\frac{1}{\psi_h}\frac{\partial\left(v_y\rho\right)}{\partial y}+\frac{r}{L}\frac{\partial\left(v_z\rho\right)}{\partial z}=0 \tag{4}$$

where F is the force; Fr is the Froude number; L is the length of the segment, Re is the Reynolds number; Sh is the Strouhal number; p is the pressure; r is the journal radius; t is the time; v_x is the peripheral linear velocity; v_y is the velocity in y-coordinate direction; v_z is centerline linear velocity; x, y, z are coordinates of lubricant layer; μ is dynamic viscosity of the lubricant; ρ is the lubricant density; φ is the angular coordinate; $x=r\varphi$; $y=h_0y^*$; $z=Lz^*$; $v_x=Uv_x^*$; $v_y=Vv_y^*$; $v_z=Uv_z^*$; $\rho=\rho_0\rho^*$; $\mu=\mu_0\mu^*$; $\tau=t_1t$; $\psi_h=\frac{h_0}{r}$; $p=\frac{\mu_0 rU}{h_0^2}p^*$ and

$$\Diamond_x=2\frac{\partial}{\partial x}\left(\mu\frac{\partial v_x}{\partial x}\right)+\frac{\partial}{\partial y}\left[\mu\left(\frac{V}{U}\frac{1}{\psi_h}\frac{\partial v_y}{\partial x}+\frac{1}{\psi_h^2}\frac{\partial v_x}{\partial y}\right)\right]+\frac{\partial}{\partial z}\left[\mu\left(\frac{r}{L}\frac{\partial v_z}{\partial x}+\frac{r^2}{L^2}\frac{\partial v_x}{\partial z}\right)\right] \tag{5}$$

$$\Diamond_y=2\frac{V}{U}\frac{\partial}{\partial y}\left(\mu\frac{\partial v_y}{\partial y}\right)+\frac{\partial}{\partial z}\left[\mu\left(\frac{1}{\psi_h}\frac{r}{L}\frac{\partial v_z}{\partial y}+\frac{V}{U}\frac{r^2}{L^2}\frac{\partial v_y}{\partial z}\right)\right]+\frac{\partial}{\partial x}\left[\mu\left(\frac{1}{\psi_h}\frac{\partial v_x}{\partial y}+\frac{V}{U}\frac{\partial v_y}{\partial x}\right)\right] \tag{6}$$

$$\Diamond_y=2\frac{V}{U}\frac{\partial}{\partial y}\left(\mu\frac{\partial v_y}{\partial y}\right)+\frac{\partial}{\partial z}\left[\mu\left(\frac{1}{\psi_h}\frac{r}{L}\frac{\partial v_z}{\partial y}+\frac{V}{U}\frac{r^2}{L^2}\frac{\partial v_y}{\partial z}\right)\right]+\frac{\partial}{\partial x}\left[\mu\left(\frac{1}{\psi_h}\frac{\partial v_x}{\partial y}+\frac{V}{U}\frac{\partial v_y}{\partial x}\right)\right] \tag{7}$$

$$divV=\frac{\partial v_x}{\partial x}+\frac{V}{U}\frac{1}{\psi_h}\frac{\partial v_y}{\partial y}+\frac{r}{L}\frac{\partial v_z}{\partial z}\,. \tag{8}$$

If it has been obtained that $\psi_h\approx 10^{-3}$, then all the terms with dimensionless values reaching the order of up to ψ_h^2 in Eqs. (1)-(4) can be omitting subject to the engineering precision of calculation. As a result of this simplification, one of several possible sets of the first approximation for the supporting lubricant layer is obtained

$$\left.\begin{aligned}&\frac{\partial v_x}{\partial t}+V\nabla v_x=-\frac{1}{\rho}\frac{\partial p}{\partial x}+\frac{\mu}{\rho}\nabla^2 v_x\\&\frac{\partial p}{\partial y}=0\\&\frac{\partial v_z}{\partial t}+V\nabla v_z=-\frac{1}{\rho}\frac{\partial p}{\partial z}+\frac{\mu}{\rho}\nabla^2 v_z\end{aligned}\right\} \tag{9}$$

The local and convective inertial forces in Eqs. (9) can be transformed by means of certain substitution. By assuming that $\partial y/\partial t=v_y;\ \partial x/\partial t=v_x;\ \partial z/\partial t=v_z$ and designating $\frac{\partial y}{\partial t}\frac{\partial v_i}{\partial y};\ \frac{\partial x}{\partial t}\frac{\partial v_i}{\partial y}\frac{\partial y}{\partial x};\ \frac{\partial z}{\partial t}\frac{\partial v_i}{\partial y}\frac{\partial y}{\partial z};\ (i=x,z)$, we obtain [1]

$$\left.\begin{aligned}&k_I v_y\frac{\partial v_x}{\partial y}=-\frac{1}{\rho}\frac{\partial p}{\partial x}+\frac{1}{\rho}\frac{\partial}{\partial y}\left(\mu\frac{\partial v_x}{\partial y}\right)\\&\frac{\partial p}{\partial y}=0\\&k_I v_y\frac{\partial v_z}{\partial y}=-\frac{1}{\rho}\frac{\partial p}{\partial z}+\frac{1}{\rho}\frac{\partial}{\partial y}\left(\mu\frac{\partial v_z}{\partial y}\right)\end{aligned}\right\} \tag{10}$$

where $k_I=\frac{Dv_i}{\partial \tau}\Big/v_y\frac{\partial v_i}{\partial y}$ is the coefficient specifying the number of inertial force components taken to account.

When $k_I=0$ Eqs. (10) are transformed into the Reynolds equations of lubrication. Taking into consideration that the flow is two-dimensional, the velocity profiles, flow function and pressure distribution throughout the generalized lubricant layer can be found by means of Eqs. (10). In the case of a hydrodynamic lubricant film the stability of state of the lubricant across the thickness of the layer results in the independence of thermal capacity and coefficients of heat conductivity and viscosity from coordinate y. This makes it possible to integrate Eqs. (10) under averaged local terms of inertia force.

By integrating the first and third motion equations across the thickness of the film under boundary conditions $y=0;\ v_x=V;\ v_z=W$ and $y=h;\ v_x=0;\ v_z=0,$ we obtain

$$v_x=\frac{1}{2}\left[\frac{1}{\mu}\frac{\partial p}{\partial x}+\frac{\rho}{\mu}k_I\frac{1}{h}\int_0^h\frac{\partial v_x}{\partial t}dy\right]y(y-h)+$$
$$+V\left(1-\frac{y}{h}\right) \tag{11}$$
$$v_z=\frac{1}{2}\left[\frac{1}{\mu}\frac{\partial p}{\partial z}+\frac{\rho}{\mu}k_I\frac{1}{h}\int_0^h\frac{\partial v_z}{\partial t}dy\right]y(y-h)+$$
$$+W\left(1-\frac{y}{h}\right) \tag{12}$$

where h is thickness of the lubricant film.

The function of the current Ψ is determined by the expression

$$\Psi=\frac{1}{2}\int\left[\frac{1}{\mu}\frac{\partial p}{\partial x}+\frac{\rho}{\mu}k_I\frac{1}{h}\int_0^h\frac{\partial v_x}{\partial t}dy\right]y(y-h)dy+$$
$$+V\int\left(1-\frac{y}{h}\right)dy \tag{13}$$

By integrating the continuity Eq. (4) by y across the thickness of the layer and by substituting velocity values (11) and (12) into it, we obtain equations for the calculation of pressure in the generalized lubricant layer with inertial forces taken into account:

$$\frac{\partial}{\partial x}\left(\frac{h^3}{\mu}\rho\frac{\partial p}{\partial x}\right)+\frac{\partial}{\partial z}\left(\frac{h^3}{\mu}\rho\frac{\partial p}{\partial z}\right)=6\frac{\partial}{\partial x}(V_{ij}h\rho)+$$
$$+12\frac{\partial(h\rho)}{\partial t}-\frac{\partial}{\partial x}\left(\frac{\rho^2}{\mu}k_I h^2\int_0^h\frac{\partial v_x}{\partial t}dy\right)-$$
$$-\frac{\partial}{\partial z}\left(\frac{\rho^2}{\mu}k_I h^2\int_0^h\frac{\partial v_z}{\partial t}dy\right) \tag{14}$$

The equation obtained can also be generalized for the case of a turbulent flow.

Equation for the calculation of pressure (Eq. (14)) in the supporting lubricant layer with inertial forces taken into consideration also can be presented as follows

$$\frac{\partial}{r_i\partial\varphi}\left(\frac{h^3}{\mu}\frac{\partial p}{r_i\partial\varphi}\right)+\frac{\partial}{\partial z}\left(\frac{h^3}{\mu}\frac{\partial p}{\partial z}\right)=$$
$$=6\left(1+2\frac{\omega_i'}{\omega_i}\right)\frac{\partial}{r_i\partial\varphi}(V_{ij}h)-$$
$$-\frac{\partial}{r_i\partial\varphi}\left(\frac{\rho}{\mu}k_I h^2\int_0^h\frac{\partial v_x}{\partial t}dy\right)-$$
$$-\frac{\partial}{\partial z}\left(\frac{\rho}{\mu}k_I h^2\int_0^h\frac{\partial v_z}{\partial t}dy\right) \tag{15}$$

where ω_i is angular velocity of the rotor; ω_i' is angular velocity of the rotor in case of nonstationary rotation.

The term ω_i'/ω_i in Eq. (15) characterized the instability of the system at the moments of start-up and shutdown as well as under various disturbances. This term represents the transfer function of the system. The nonstationary rotation period of the system is defined by fluctuations of trajectory of rotor centre observable in Fig. 2 inside the Lissajous figures. Surrounding part of the figures represents the stationary rotation followed the start-up period. Fig. 2 illustrates that, while the rotational speed of the rotor increases from 3500 to 5500 rpm, the thickness of the rotor orbits decreases.

4. Analysis of modular structure systems

Fluid friction bearings considered above differ from each other by the design of bearing segments, elastic intersegmentary ties, geometrical dimensions and the method of controlling the shape of supporting lubrication layer as well as their stress. Elastic ties between segments or elastic bearings of segments (Fig. 1) restrict movement of the segments beyond the rotor and, consequently, have certain effect on their stability and accuracy. On the other hand, such design solution has an advantage as regards the reduced friction moment at start-up. However, the influence of elastic ties on the mobility and stability of segments under high rotational frequency of the rotor journal requires the application of the system analysis and research. One of the basic tasks of the system analysis is the determination of geometric parameters and effect of elastic ties on the conditions of origination of the whirling motion of the rotor.

The structure of self-adjusting hydrodynamic bearing as a lower rank system (Fig. 1) is represented by a series of its elements (rotor, segments, bearings of segments, linking ribbons and lubricant), by relevant properties of elements (chemical composition, modulus of elasticity, hardness, density, thermal conductivity, geometrical shape, roughness, composition of surfaces and viscosity of lubricant) and by ties between the elements in their relative movement (friction and wear processes during the rotor's start-up and shutdown and the processes of hydrodynamic lubrication (Fig. 2)). Basic properties of the elements used in hydrodynamically lubricated systems of contemporary machines are presented in the [3]. The segments are made bimetallic; the housing is made of steel, whereas the anti-friction layer is made of bronze or babbitt. In some cases (small-scale bearings) they can be made solely of bronze. Conjugation of a bimetallic segment with bearings creates the subsystem "segment-bearing", the characteristic element properties of which are presented in [3]. Determine the parameters, such as geometrical dimensions of elements. Let the supporting thickness of the lubricant film (Fig. 1) satisfy the geometric mean while within the boundaries of the segments manufacturing precision

$$h_0=\sqrt{h_1h_2}\Rightarrow\frac{h_1}{h_0}=\frac{h_0}{h_2} \tag{16}$$

$$\frac{h_0}{h_2}=\frac{a_h+i}{i+1} \tag{17}$$

where $a_h=h_1/h_2$ is the dimensionless correlation of the lubricant film's thickness at the entrance and exit of a

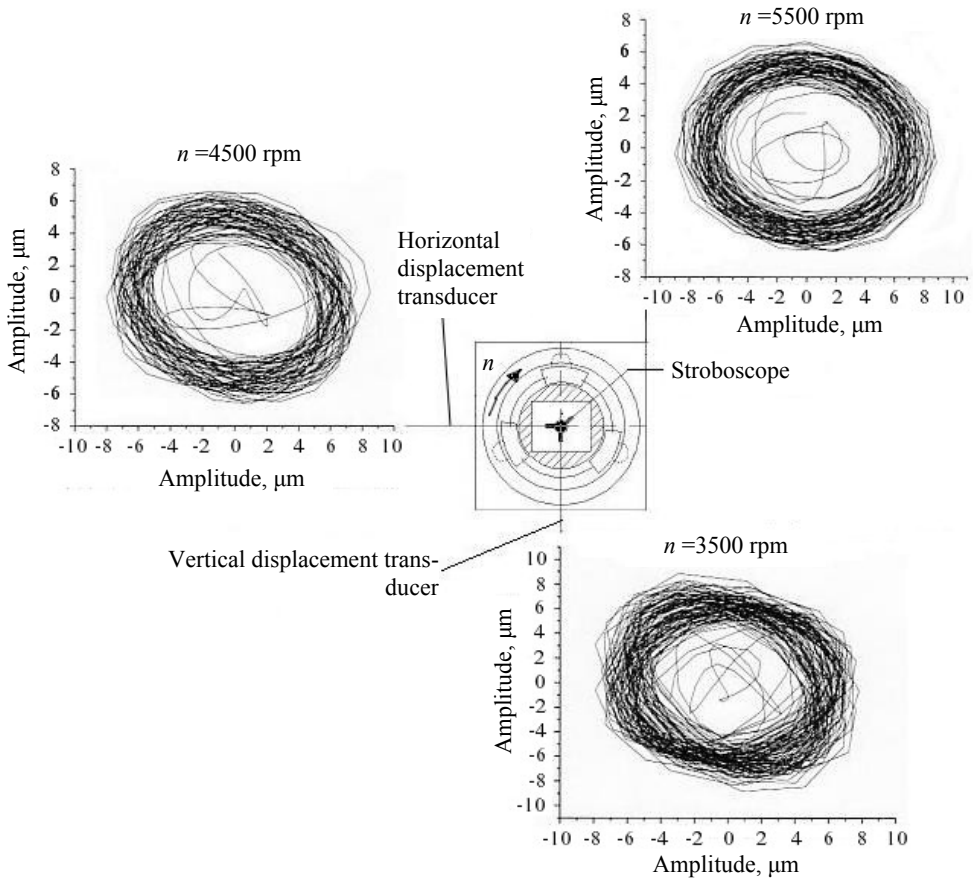

Fig. 2 Results of measurement of bearing rotor's axis displacement performed by means of noncontact induction transducers

segment; $i = l_1/l_2 = \varphi_1/\varphi_2$ is gear ratio of the segment (Fig. 1).

By substituting the obtained values into the initial correlation and performing simple transformation we obtain

$$a_h = i^2 \tag{18}$$

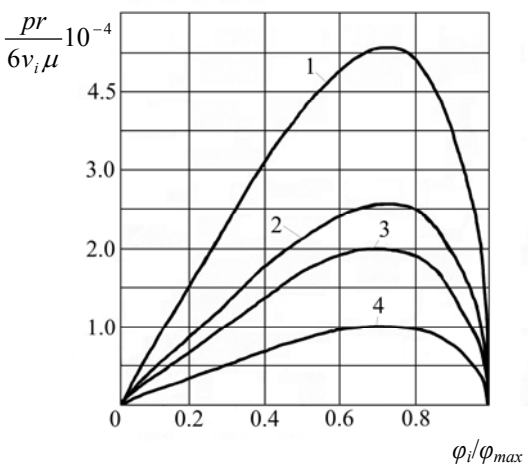

Fig. 3 Distribution of pressure of the lubricant layer between the rotor and segments of the tilting-pad hydrodynamic slider bearing ($r = 45$ mm; $\omega_i = 2000$ 1/s; $\varphi_{max} = \varphi_1 + \varphi_2 = \pi/3$): *1* - $k_I = 4.0$, $h = 0.1$ mm; *2* - $k_I = 4.0$, $h = 0.2$ mm; *3* - $k_I = 1.0$, $h = 0.1$ mm; *4* - $k_I = 1.0$, $h = 0.2$ mm

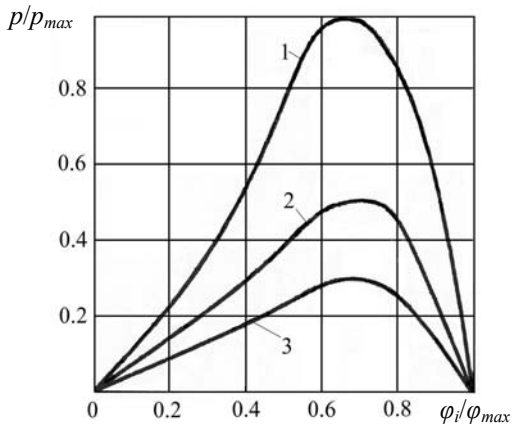

Fig. 4 Distribution of pressure of the lubricant layer depending of ω' value ($\omega_i = 2000$ 1/s): *1* - $\omega_i' = \omega_i$; *2* - $\omega_i' = 0.5\omega_i$; *3* - $\omega_i' = 0$

The rotation angle of the segment's normal on the spherical bearing corresponds to the rotation angle of the segment θ_n

$$\frac{dh}{(r+h)d\varphi} = -tg\,\theta_n \tag{19}$$

While the angle is constant, the shape of the hydrodynamic wedge is determined by the formula

$$h = (r+h)exp(tg\,\theta_n\varphi_i) - r \tag{20}$$

Functional reliability of such system in many respects depends on the ties between the elements in their relative motion.

Interaction of the elements is limited by hydrodynamic, tribological and thermoelastic processes and ties. This influences the system's stress. The initial stress of the system (Fig. 1) is created by pre-straining the linking ribbons by means of radial displacement of segments.

Dynamics of a segment can be described by the following equation

$$I_p\ddot{\Theta}^{(j)} + H_\Theta\dot{\Theta}^{(j)} + C_\Theta\Theta^{(j)} = M_N^{(j)} \qquad (21)$$

The analysis of Eq. (21) shows that if at least one of the values I_p, H_Θ or C_Θ for each segment (pad) shows a tendency to infinity, a pad-type (segmentary) adaptive bearing degenerates into a bearing with immobile segments fixed in stationary positions. Otherwise, when forces of external resistance to rotation of the segments do not exist ($I_p = H_\Theta = C_\Theta = 0$) an ideal self-aligning segmentary bearing is obtained. So, the developed bearings are found between extremes.

It should be noted that there are lower and upper limits of rigidity of the coupling bands, corresponding to the cases of disconnected self-aligned segmentary bearings and rigid multi-lobe bearings. The analyzed bearings fall between these two types of bearings.

Numerical analysis of the dimensionless Eq. (15) at fixed time intervals when $k_I = 1, ..., 4$ and equation of lubricant film (Eq. (20)) shows (Fig. 3) that the pressure may fluctuate within wide range, depending of the frequency component ω_i' (Fig. 4).

5. Conclusion

This work gives an account of the principle of modular design of adaptable fluid friction bearings. This principle allows taking into consideration the specific features of the stressed state of interacting elements in a particular construction. Using the modified Reynolds equation and joining it to other modular equations achieve this. The segmental bearing is used to illustrate the principle of modular design. Since the advantages of modular design are associated with various operation modes of a tribological system, the idea of a modular (segmentary) bearing seems rather promising.

References

1. **Vekteris, V.** Principles of design and classification of adaptive bearings. -Tribology Transactions. -Taylor & Francis, 1993, No.2, p.225-230.
2. **Muszynska, A.** Rotordynamics.-Boca Raton, London, New York, Singapore: CRC Taylor & Francis Group, 2005.-1120p.
3. **Vekteris, V.** Adaptive Tribological Systems. -Vilnius: Technika, 1996.-256p.
4. **Patel, H. C., Deheri, G.M.** Characteristics of lubrication at nano scale on the performance of transversely rough slider bearing. -Mechanika. -Kaunas: Technologija, 2009, Nr.6(80), p.64-71.
5. **Vasylius, M., Didžiokas, R., Mažeika, P., Barzdaitis, V.** The rotating system vibration and diagnostics. -Mechanika. -Kaunas: Technologija, 2008, Nr.4(72), p.54-58.

V. Vekteris, V. Mokšin

MODULINIS ADAPTYVIŲJŲ SKYSTOSIOS TRINTIES GUOLIŲ PROJEKTAVIMO PRINCIPAS

R e z i u m ė

Straipsnyje suformuluoti pagrindiniai adaptyviųjų skystosios trinties guolių, kaip žemiausio lygio tribologinės sistemos, modulinio projektavimo teiginiai. Sudaryti matematiniai moduliai, apybūdinantys tepalo sluoksnio suspaudimo sąlygas. Jie nagrinėjami kaip guolio struktūriniai elementai. Atsižvelgiant į juos parenkama guolio darbinio paviršiaus forma ir reguliavimo elementų tipas. Moduliai sujungiami per dinaminį tepalo sluoksnio tamprumą, sprendžiant modifikuotą Reynoldso lygtį.

V. Vekteris, V. Mokšin

THE MODULAR PRINCIPLE OF DESIGN OF ADAPTIVE FILM LUBRICATION BEARINGS

S u m m a r y

General formulation of modular design of adaptive film lubrication bearings as tribological systems of the lowest range is presented in the article. Mathematical modular elements characterizing condition of tension of the bearing layer of lubricant as a structural bearing element are given. According to them the configuration of structure of the bearing surface as well as the type of regulated bearing elements is defined. Jointing of mathematical modules is effected through the dynamic tension of the bearing layer of lubricant on the basis of solution of modified equation of Reynolds.

В. Вектерис, В. Мокшин

МОДУЛЬНЫЙ ПОДХОД К ПРОЕКТИРОВАНИЮ АДАПТИВНЫХ ПОДШИПНИКОВ ЖИДКОСТНОГО ТРЕНИЯ

Р е з ю м е

В статье сформулированы основные положения модульного проектирования адаптивных подшипников жидкостного трения как трибологической системы низшего ранга. Приведены математические модули, характеризующие условия сжатия слоя смазки в зазоре подшипника. Согласно им подбирается форма рабочей поверхности подшипника и тип регулирующих элементов. Объединение модулей осуществляется на основе решения модифицированного уравнения Рейнольдса.

Received March 24, 2010
Accepted July 02, 2010